TECHNICAL DATASHEET

# High Power Led Bulb W21W Amber (2 Pcs)

**Item number:** 41474 - **EAN:** 8051886323884

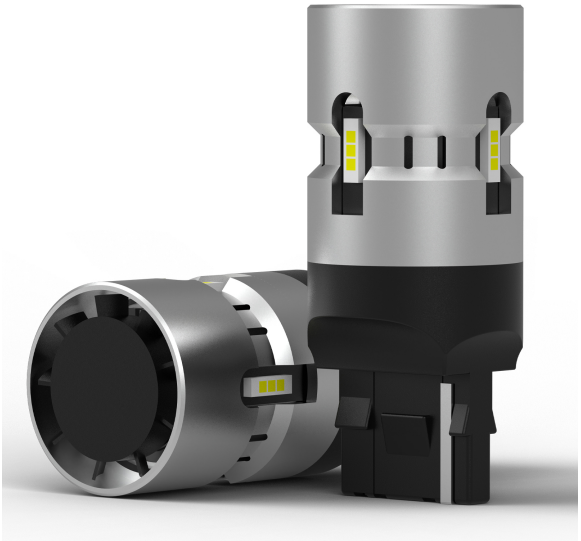

TECHNICAL DATA

## Product information

| | |
|---|---|
| **Assorbimento potenza [W]** | 21 |
| **Colore luce LED** | ambra |
| **Quantità** | 2 |
| **Specificazione** | T20 21W |
| **Temperatura colore [K]** | 6500K |
| **Tensione [V]** | 12 |
| **Tipo lampada** | W21W |
| **Tipo luce** | LED |
| **Tipo zoccolo** | W3X16d |


© 2025. All rights reserved. TOP LIGHT ITALIA SRL

## SIMILAR SPARE PARTS (CROSS REFERENCE)

The product also replaces:

| OSRAM | PHILIPS |
|---|---|
| 7504 | 12071B2 |

## IMAGES

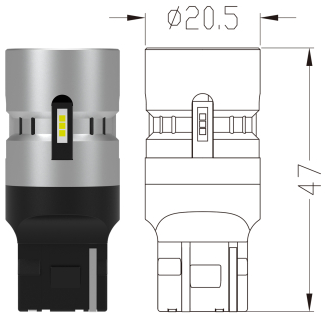

© 2025. All rights reserved. TOP LIGHT ITALIA SRL