TECHNICAL DATASHEET

High Power Led Bulb W21/5W Bianco / White (2 Pcs)

Item number: 41476 - **EAN:** 8051886323907

TECHNICAL DATA

Product information

Assorbimento potenza [W]	14/5
Quantità	2
Specificazione	T20 21/5W
Temperatura colore [K]	6500K
Tensione [V]	12
Tipo lampada	W21/5W
Tipo luce	LED
Tipo zoccolo	W3X16q

© 2025. All rights reserved. TOP LIGHT ITALIA SRL

SIMILAR SPARE PARTS (CROSS REFERENCE)

The product also replaces:

OSRAM	PHILIPS
7515	12066B2

IMAGES

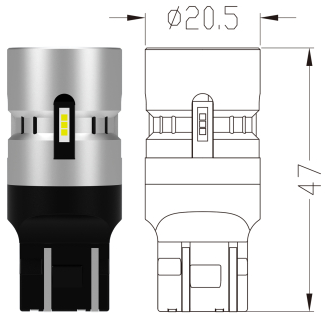

© 2025. All rights reserved. TOP LIGHT ITALIA SRL