TECHNICAL DATASHEET

Kit Headlight COMPACT SERIES HB3-9005 (2 PCS)

Item number: 506983 - **EAN:** 8057587710749

TECHNICAL DATA

Product information

Product line	Compact
Assorbimento potenza [W]	50
Luminosità	20'000 LUX @ 1,5mt
Per Faro	a parabola e Lenticolare
Quantità	2
Temperatura colore [K]	6500
Tensione [V]	12
Tipo lampada	HB3
Tipo luce	LED
Tipo protezione (IP-Code)	IP67
Tipo zoccolo	P20D

© 2025. All rights reserved. TOP LIGHT ITALIA SRL

SIMILAR SPARE PARTS (CROSS REFERENCE)

The product also replaces:

OSRAM	PHILIPS
9005	9005PRB1

IMAGES

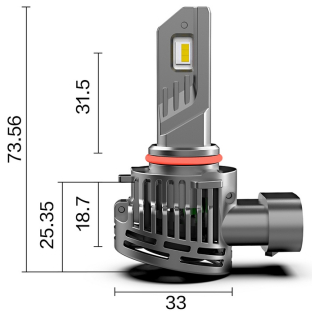

© 2025. All rights reserved. TOP LIGHT ITALIA SRL